# SPRING BALANCER

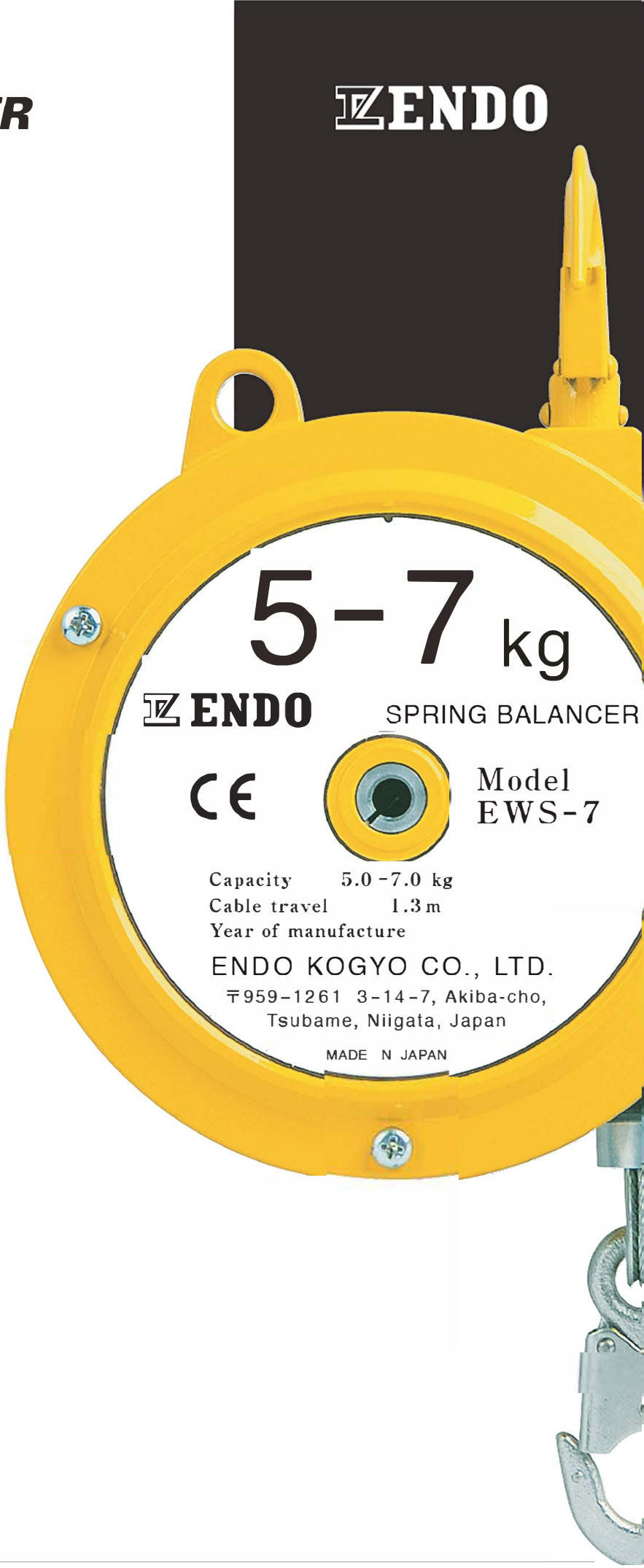

# SPRING BALANCER

# What is Spring balancers?

The tension is kept stable on even if the cable is pulled out or retrieved because of the tapered drum. So Spring balancers can hold the tools suspended in hollow and work for flexible positioning of the tools. Workers can enjoy comfortable operation with less fatigue.

# Location of use

- Suspending a tool for product assembly line.
- Frequent fastening screws, bolts and nuts.
- Suspending a jig, tool, welding gun etc.

# Advantages

- The balancers improve working efficiency and diminish worker fatigue.
- The balancers make the position of a tool stable and contribute to accurate work.
- The balancers are available for keeping a tool not damaged.
- Any electric or pneumatic power is not required and safe working is achieved.

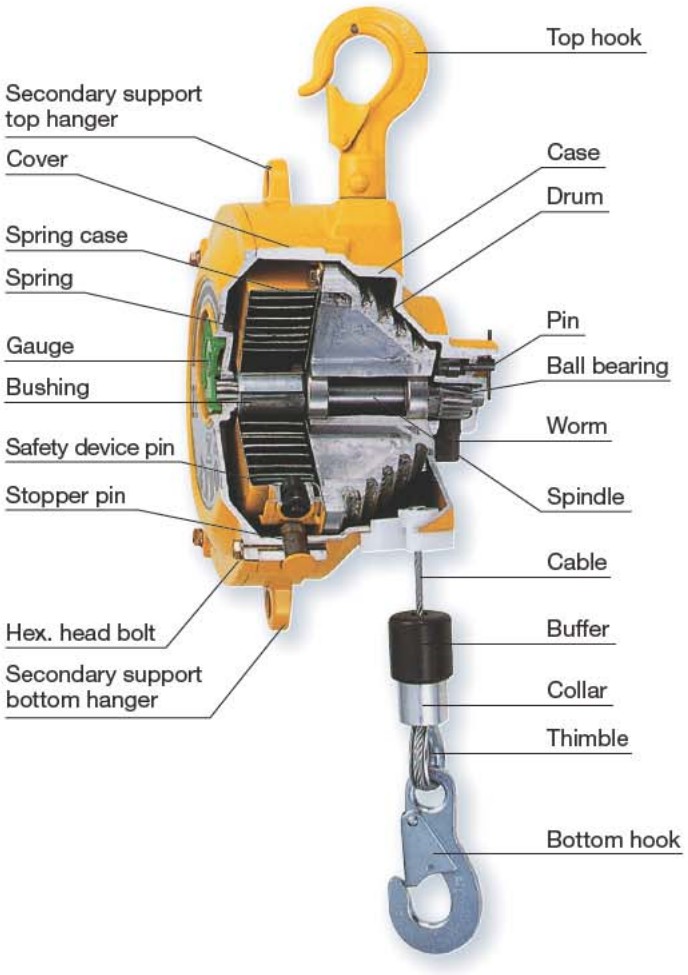

# SPRING BALANCER

## How to adjust spring tension

Worm gear system, Ratchet system or Handle system are available and dependent on the models. Clockwise adjustment increases the spring tension and Counter clockwise adjustment decreases the spring tension. (The spring tension has been set at the middle of capacity in advance prior to shipment)

| | | | | | |
|---|---|---|---|---|---|
| ***Handle system*** | ERP model | | | | |
| ***Ratchet system*** | EK-00,EK-0 | EW-3,5 | SBC | ER model | ATB model |
| ***Worm gear system*** | EWS model | EWF model | ELF model | RSB model | |
| | ETP model | THB model | ATR model | EWA model | |

### Handle system

### Ratchet system

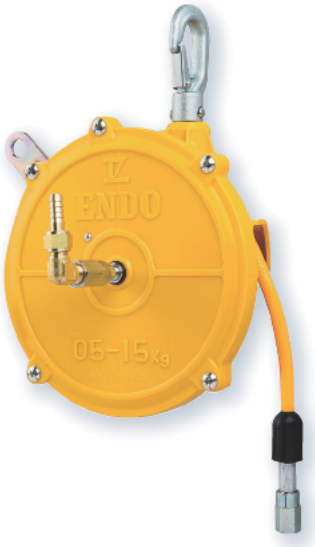


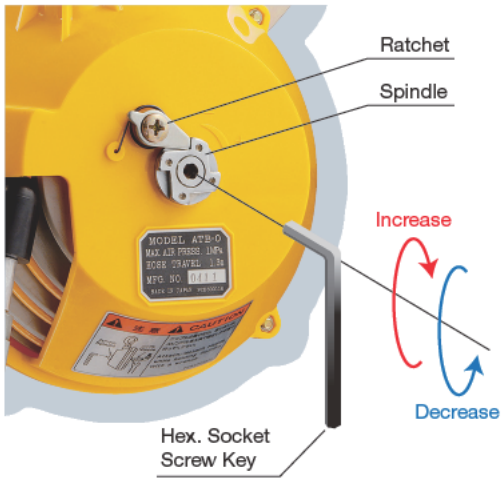


### Worm gear system

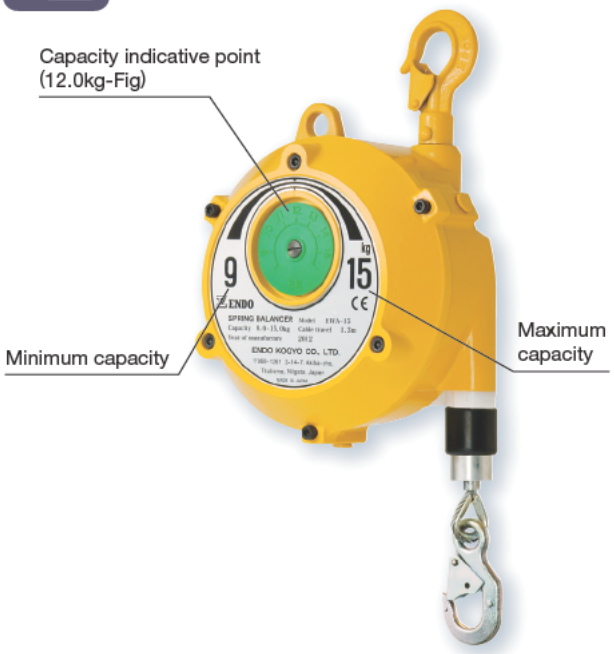


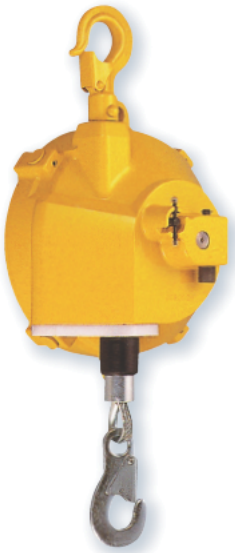

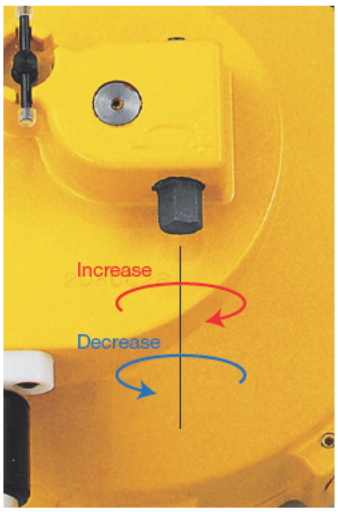


Read the instruction manual carefully for details.

## Features

※All features are not always available on all balancers.

### Fall arrest device

When spring brakes, safety pin pops out and collides with pin fixed or case to prevent the suspended tools from falling.

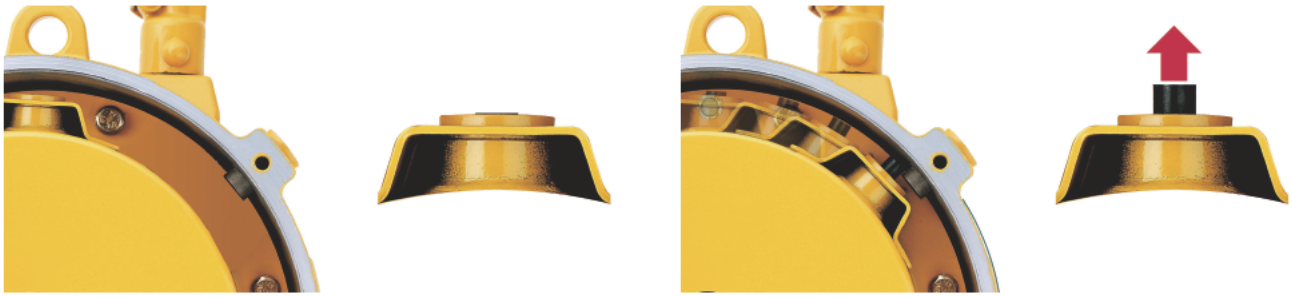

### Drum lock device

By changing the position of the pin, you can lock the drum rotating. It provides easy tool/wire rope replacement.

### Gauge

The gauge indication contributes to worker recognition on tension adjustment.

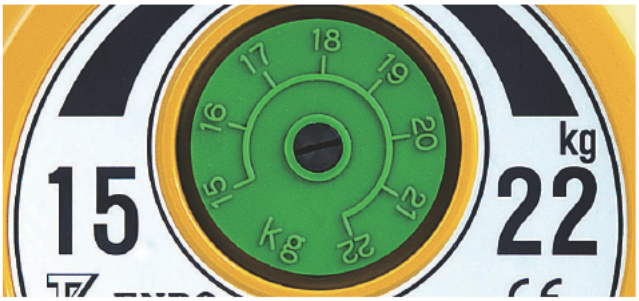


### Secondary support hanger

The secondary support hanger is available on every model.

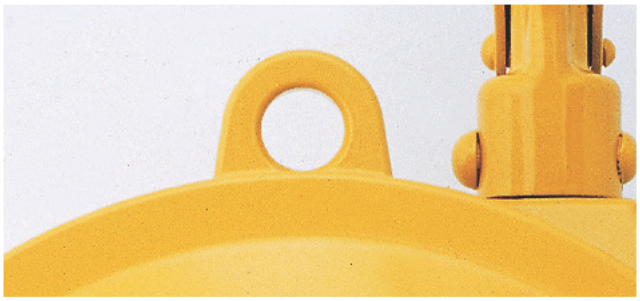

### Cartridge spring assembly

Cartridge spring provides easy and safe spring replacement.

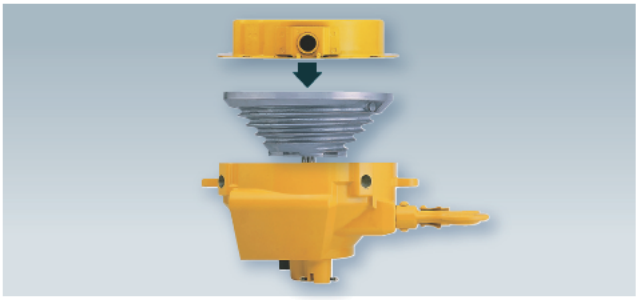

### Wire rope replacement

The plug fixing system provides the easy cable replacement.

# SPRING BALANCER

## Summary

| Type | Model | Capacity(kg) | Stroke (m) | Cable dia ($\varphi$mm) | Mass (kg) | CE | |
|---|---|---|---|---|---|---|---|
| Light capacity | EK-00 | 0.5 - 1.5 | 0.5 | 2.0 | 0.2 | ○ | Suitable for light weight tools like an electric driver. |
| | EK-0 | 0.5 - 1.5 | 1.0 | 3.0 | 0.5 | ○ | |
| | ERP-06E | 0.3 - 0.6 | 1.5 | 2.0 | 0.4 | ○ | |
| | ERP-1E | 0.5 - 1.0 | 1.5 | 2.0 | 0.4 | ○ | |
| | ERP-2E | 1.0 - 2.0 | 1.5 | 2.0 | 0.4 | ○ | P.7 |
| Standard | EW-3 | 1.0 - 3.0 | 1.3 | 3.0 | 1.4 | ○ | Most popular series for a welding gun, pneumatic tool etc. Many safety features are equipped. |
| | EW-5 | 2.5 - 5.0 | 1.3 | 3.0 | 1.5 | — | |
| | EWS-3 | 1.5 - 3.0 | 1.3 | 3.0 | 1.9 | ○ | |
| | EWS-5 | 3.0 - 5.0 | 1.3 | 3.0 | 2.1 | ○ | |
| | EWS-7 | 5.0 - 7.0 | 1.3 | 3.0 | 2.1 | ○ | |
| | EWF-9 | 4.5 - 9.0 | 1.3 | 4.0 | 3.5 | ○ | |
| | EWF-15 | 9.0 - 15.0 | 1.3 | 4.0 | 3.8 | ○ | |
| | EWF-22 | 15.0 - 22.0 | 1.5 | 4.76 | 7.3 | ○ | |
| | EWF-30 | 22.0 - 30.0 | 1.5 | 4.76 | 7.7 | ○ | |
| | EWF-40 | 30.0 - 40.0 | 1.5 | 4.76 | 9.7 | ○ | |
| | EWF-50 | 40.0 - 50.0 | 1.5 | 4.76 | 10.1 | ○ | |
| | EWF-60 | 50.0 - 60.0 | 1.5 | 4.76 | 11.1 | ○ | P.8 |
| Large capacity | EWF-70 | 60.0 - 70.0 | 1.5 | 4.76 | 11.4 | ○ | Suitable for heavy weight devices like a multiple nut runner. |
| | EWF-90 | 70.0 - 90.0 | 2.0 | 4.76 | 21.9 | ○ | |
| | EWF-105 | 85.0 - 105.0 | 2.0 | 4.76 | 24.0 | ○ | |
| | EWF-120 | 100.0 - 120.0 | 2.0 | 4.76 | 27.5 | ○ | |
| | ETP-14 | 120.0 - 140.0 | 1.2 | 6.0 | 24.1 | ○ | |
| | ETP-15 | 140.0 - 170.0 | 1.2 | 6.0 | 28.7 | ○ | |
| | ETP-16 | 170.0 - 200.0 | 1.2 | 6.0 | 29.7 | ○ | P.10 |
| Long stroke | ELF-3 | 1.5 - 3.0 | 2.5 | 3.0 | 4.6 | ○ | Available for high ceiling applications. |
| | ELF-5 | 3.0 - 5.0 | 2.5 | 3.0 | 4.8 | ○ | |
| | ELF-9 | 5.0 - 9.0 | 2.5 | 3.0 | 5.4 | ○ | |
| | ELF-15 | 9.0 - 15.0 | 2.5 | 4.76 | 10.0 | ○ | |
| | ELF-22 | 15.0 - 22.0 | 2.5 | 4.76 | 10.2 | ○ | |
| | ELF-30 | 22.0 - 30.0 | 2.5 | 4.76 | 11.0 | ○ | |
| | ELF-40 | 30.0 - 40.0 | 2.5 | 4.76 | 14.0 | ○ | |
| | ELF-50 | 40.0 - 50.0 | 2.5 | 4.76 | 14.5 | ○ | |
| | ELF-60 | 50.0 - 60.0 | 2.5 | 4.76 | 17.1 | ○ | |
| | ELF-70 | 60.0 - 70.0 | 2.5 | 4.76 | 18.0 | ○ | P.11 |
| With Ratchet | RSB-15 | 9.0 - 15.0 | 1.5 | 5.0 | 7.4 | — | Available for holding suspend tool on the way of stroke mechanically. Even if no load is applied, its hook can be hold on the way of stroke. P.12 |
| | RSB-22 | 15.0 - 22.0 | 1.5 | 5.0 | 7.7 | — | |
| | RSB-30 | 22.0 - 30.0 | 1.5 | 5.0 | 8.1 | — | |
| | RSB-40 | 30.0 - 40.0 | 1.5 | 5.0 | 8.5 | — | |

| Type | Model | Capacity(kg) | Stroke (m) | Cable/Hose dia (φmm) | Mass (kg) | CE | |
|---|---|---|---|---|---|---|---|
| With cable snap back prevention device | EWA-15 | 9.0 - 15.0 | 1.3 | 4.0 | 4.7 | ○ | Having device to arrest wire rope snap back in case that a wire rope is cut or suspended tool is disengaged. It will save worker from injury or dangerous occurred by such a situation. |
| | EWA-22 | 15.0 - 22.0 | 1.5 | 4.76 | 8.9 | ○ | |
| | EWA-30 | 22.0 - 30.0 | 1.5 | 4.76 | 9.3 | ○ | |
| | EWA-40 | 30.0 - 40.0 | 1.5 | 4.76 | 11.9 | ○ | |
| | EWA-50 | 40.0 - 50.0 | 1.5 | 4.76 | 12.3 | ○ | |
| | EWA-60 | 50.0 - 60.0 | 1.5 | 4.76 | 13.3 | ○ | |
| | EWA-70 | 60.0 - 70.0 | 1.5 | 4.76 | 13.6 | ○ | P.13 |
| With brake system | EWF-3B | 1.5 - 3.0 | 1.3 | 3.0 | 4.7 | ○ | Having one-way clutch lining braking system. Provide speedy and safe work by moving up tools slowly. |
| | EWF-5B | 3.0 - 5.0 | 1.3 | 3.0 | 8.9 | ○ | |
| | EWF-7B | 5.0 - 7.0 | 1.3 | 3.0 | 9.3 | ○ | P.14 |
| Air tool balancer | ATB-0 | 0.5 - 1.5 | 1.3 | 6.3 | 1.58 | ○ | Having two function both hose reel and balancer. Urethane hose is wound and air tools can be easily moved up and down. |
| | ATB-1 | 1.5 - 3.0 | 1.3 | 6.3 | 1.66 | ○ | |
| | ATB-2 | 3.0 - 5.0 | 1.3 | 3.6 | 1.73 | — | P.15 |
| Tool hose balancer | THB-15 | 0.5 - 1.5 | 1.3 | 8.5 | 1.9 | ○ | Inside diameter of hose is φ8.5mm.(bigger than ATB series) which supplies enough air to operate the suspended air tool or device. |
| | THB-25 | 1.5 - 2.5 | 1.3 | 8.5 | 2.0 | ○ | |
| | THB-35 | 2.5 - 3.5 | 1.3 | 8.5 | 2.1 | ○ | |
| | THB-50 | 3.5 - 5.0 | 1.3 | 8.5 | 2.1 | ○ | |
| | THB-65 | 5.0 - 6.5 | 1.3 | 8.5 | 2.2 | ○ | P.16 |

| Type | Model | Max tension N {kgf} | Stroke (m) | Cable/Hose dia (φmm) | Mass (kg) | CE | |
|---|---|---|---|---|---|---|---|
| Air tool reel | ATR-5 | 4.9 {5.0} | 2.0 | 10.0 | 3.8 | ○ | Suitable for retracting hose into the device automatically. |
| | ATR-5-1 | 4.9 {5.0} | 2.0 | 10.0 | 4.2 | ○ | P.17 |
| Torque reel | ER-3A | 18 {1.8} | 3.0 | 2.38 | 1.4 | ○ | Long travel cable is suitable for hanging pendant switch and so on. -A type has ratchet system that can be stopped on the way of cable travel. |
| | ER-3B | 18 {1.8} | 3.0 | 2.38 | 1.3 | ○ | |
| | ER-5A | 25 {2.5} | 3.0 | 2.38 | 1.5 | — | |
| | ER-5B | 25 {2.5} | 3.0 | 2.38 | 1.4 | — | |
| | ER-10A | 49 {5.0} | 4.0 | 2.38 | 4.5 | — | |
| | ER-10B | 49 {5.0} | 4.0 | 2.38 | 3.8 | — | P.18 |

# Light capacity EK ERP

***They are suitable for the light weight tool like an electric driver.***

## EK-00

**Light capacity**

FUNCTION

- Ratchet system spring adjustment
- CE Mark available

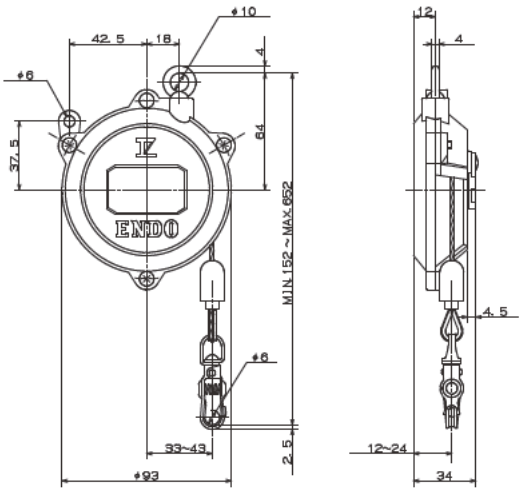


| Model | Capacity(kg) | Stroke(m) | Cable dia(φmm) | Mass(kg) |
|---|---|---|---|---|
| *EK-00* | 0.5-1.5 | 0.5 | 2.0 | 0.2 |

## EK-0

**Light capacity**

FUNCTION

- Ratchet system spring adjustment
- CE Mark available

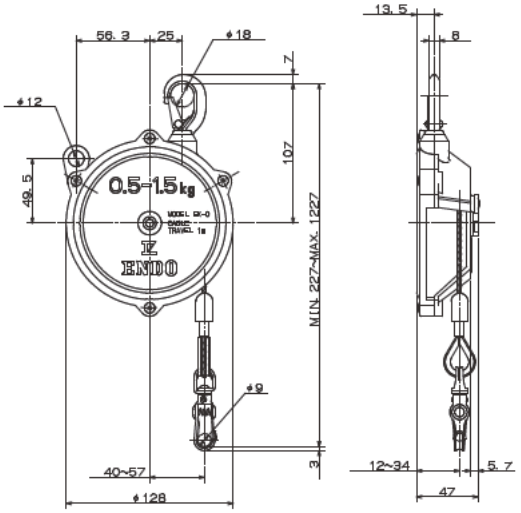


| Model | Capacity(kg) | Stroke(m) | Cable dia(φmm) | Mass(kg) |
|---|---|---|---|---|
| *EK-0* | 0.5-1.5 | 1.0 | 3.0 | 0.5 |

## ERP-06E/1E/2E

**Light capacity**

FUNCTION

- Handle system spring adjustment
- CE Mark available

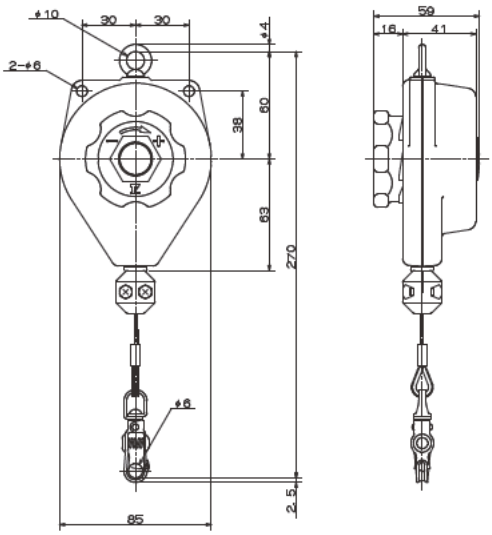


| Model | Capacity(kg) | Stroke(m) | Cable dia(φmm) | Mass(kg) |
|---|---|---|---|---|
| *ERP-06E* | 0.3-0.6 | 1.5 | 2.0 | 0.4 |
| *ERP-1E* | 0.5-1.0 | 1.5 | 2.0 | 0.4 |
| *ERP-2E* | 1.0-2.0 | 1.5 | 2.0 | 0.4 |

* A nylon rope is employed for CE market instead of a nylon coated cable.

### Selection of suitable model

Always use a suitable model meeting the total weight of suspended tool or instrument.
The balancer should be selected considering the weight of the tool and accessories.

### Installation

- Install Spring balancers uneven not to hit each other when the balancers are installed in a line.
- Always employ a secondary support chain and leave the slack for smooth swivel.
- Always adjust the spring tension to meet the total weight of tool and the application.

***Many safety features are epuipped and they are most popular. For a welding gun, Pneumatic tool etc.***

## EW-3/5

Standard

FUNCTION

- Plug type cable set
- Ratchet system spring adjustment
- CE Mark available

* Only EW-3 is available for CE Mark

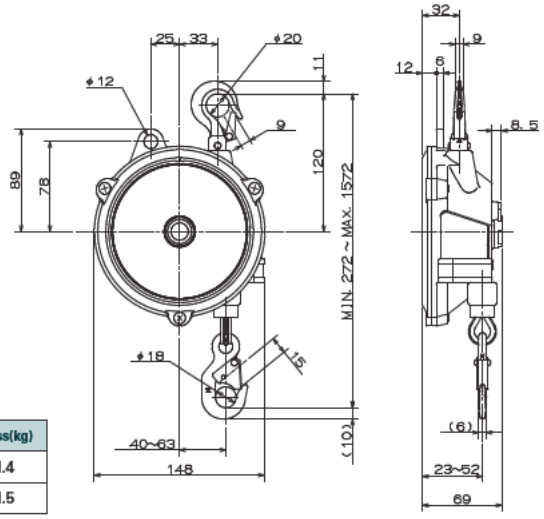


| Model | Capacity(kg) | Stroke(m) | Cable dia(φmm) | Mass(kg) |
|---|---|---|---|---|
| *EW-3* | 1.0-3.0 | 1.3 | 3.0 | 1.4 |
| *EW-5* | 2.5-5.0 | 1.3 | 3.0 | 1.5 |

## EWS-3/5/7

Standard

FUNCTION

- Plug type cable set
- Fall arrest device
- Drum lock device
- Worm gear spring adjustment
- CE Mark available

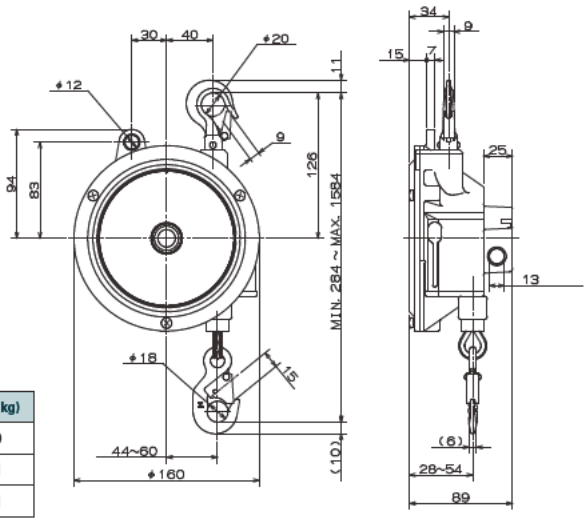


| Model | Capacity(kg) | Stroke(m) | Cable dia(φmm) | Mass(kg) |
|---|---|---|---|---|
| *EWS-3* | 1.5-3.0 | 1.3 | 3.0 | 1.9 |
| *EWS-5* | 3.0-5.0 | 1.3 | 3.0 | 2.1 |
| *EWS-7* | 5.0-7.0 | 1.3 | 3.0 | 2.1 |

## EWF-9/15

Standard

FUNCTION

- Gauge
- Cartridge spring assembly
- Plug type cable set
- Fall arrest device
- Drum lock device
- Worm gear spring adjustment
- CE Mark available

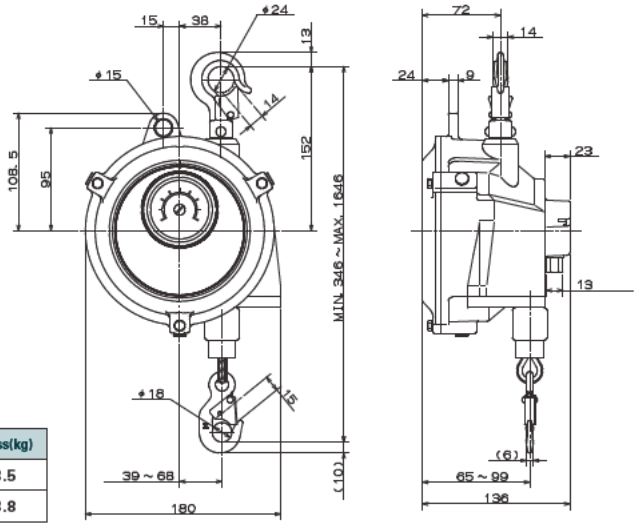


| Model | Capacity(kg) | Stroke(m) | Cable dia(φmm) | Mass(kg) |
|---|---|---|---|---|
| *EWF-9* | 4.5- 9.0 | 1.3 | 4.0 | 3.5 |
| *EWF-15* | 9.0-15.0 | 1.3 | 4.0 | 3.8 |

### Selection of suitable model

Always use a suitable model meeting the total weight of suspended tool or instrument. The balancer should be selected considering the weight of the tool and accessories.

### Installation

- Install Spring balancers uneven not to hit each other when the balancers are installed in a line.
- Always employ a secondary support chain and leave the slack for smooth swivel.
- Always adjust the spring tension to meet the total weight of tool and the application.

***Many safety features are epuipped and they are most popular. For a welding gun, Pneumatic tool etc.***

## EWF-22/30

Standard

FUNCTION

- Gauge
- Cartridge spring assembly
- Plug type cable set
- Fall arrest device
- Drum lock device
- Worm gear spring adjustment
- CE Mark available

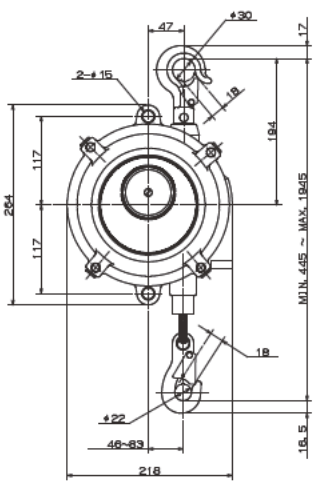


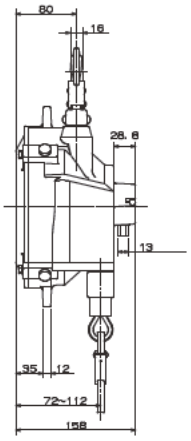


| Model | Capacity(kg) | Stroke(m) | Cable dia(ϕmm) | Mass(kg) |
|---|---|---|---|---|
| *EWF-22* | 15.0-22.0 | 1.5 | 4.76 | 7.3 |
| *EWF-30* | 22.0-30.0 | 1.5 | 4.76 | 7.7 |

## EWF-40/50

Standard

FUNCTION

- Gauge
- Cartridge spring assembly
- Plug type cable set
- Fall arrest device
- Drum lock device
- Worm gear spring adjustment
- CE Mark available

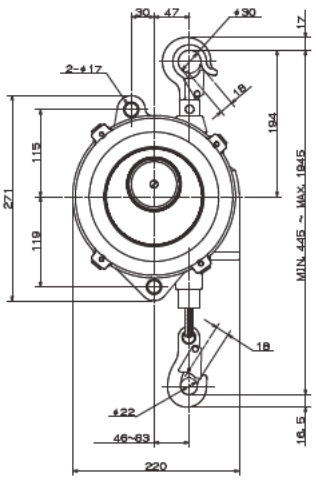


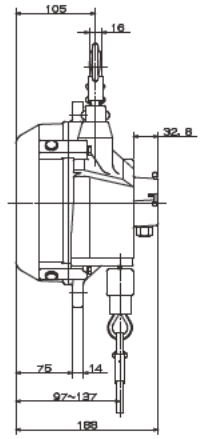


| Model | Capacity(kg) | Stroke(m) | Cable dia(ϕmm) | Mass(kg) |
|---|---|---|---|---|
| *EWF-40* | 30.0-40.0 | 1.5 | 4.76 | 9.7 |
| *EWF-50* | 40.0-50.0 | 1.5 | 4.76 | 10.1 |

## EWF-60/70

Standard

FUNCTION

- Gauge
- Cartridge spring assembly
- Plug type cable set
- Fall arrest device
- Drum lock device
- Worm gear spring adjustment
- CE Mark available

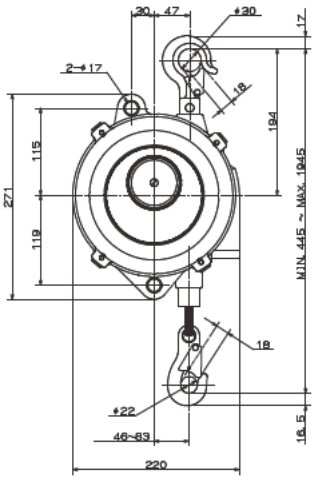


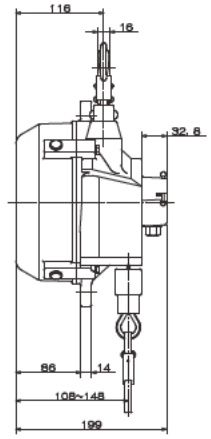


| Model | Capacity(kg) | Stroke(m) | Cable dia(ϕmm) | Mass(kg) |
|---|---|---|---|---|
| *EWF-60* | 50.0-60.0 | 1.5 | 4.76 | 11.1 |
| *EWF-70* | 60.0-70.0 | 1.5 | 4.76 | 11.4 |

### Selection of suitable model

Always use a suitable model meeting the total weight of suspended tool or instrument.
The balancer should be selected considering the weight of the tool and accessories.

### Installation

- Install Spring balancers uneven not to hit each other when the balancers are installed in a line.
- Always employ a secondary support chain and leave the slack for smooth swivel.
- Always adjust the spring tension to meet the total weight of tool and the application.

## They are suitable for a heavy weight device like multiple nut runner.

### EWF-90/105/120

Large capacity

FUNCTION

- Gauge
- Cartridge spring assembly
- Plug type cable set
- Fall arrest device
- Drum lock device
- Worm gear spring adjustment
- CE Mark available

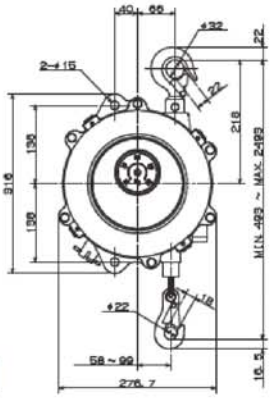

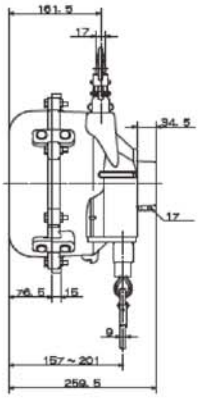

| Model | Capacity(kg) | Stroke(m) | Cable dia(φmm) | Mass(kg) |
|---|---|---|---|---|
| *EWF-90* | 70.0- 90.0 | 2.0 | 4.76 | 21.9 |
| *EWF-105* | 85.0-105.0 | 2.0 | 4.76 | 24.0 |
| *EWF-120* | 100.0-120.0 | 2.0 | 4.76 | 27.5 |

### ETP-14/15/16

Large capacity

FUNCTION

- Fall arrest device
- Worm gear spring adjustment
- CE Mark available

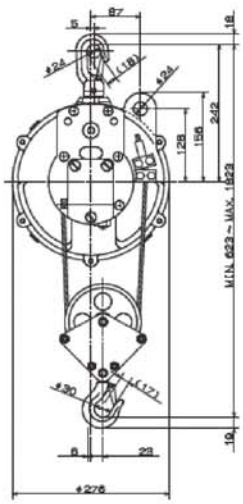

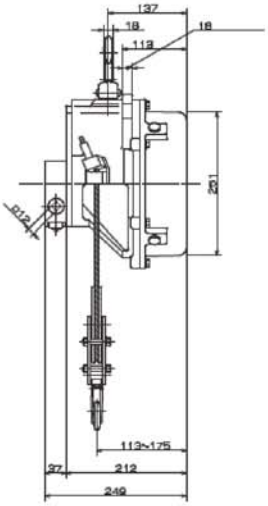

| Model | Capacity(kg) | Stroke(m) | Cable dia(φmm) | Mass(kg) |
|---|---|---|---|---|
| *ETP-14* | 120.0-140.0 | 1.2 | 6.0 | 24.1 |
| *ETP-15* | 140.0-170.0 | 1.2 | 6.0 | 28.7 |
| *ETP-16* | 170.0-200.0 | 1.2 | 6.0 | 29.7 |

### Selection of suitable model

Always use a suitable model meeting the total weight of suspended tool or instrument.
The balancer should be selected considering the weight of the tool and accessories.

### Installation

- Install Spring balancers uneven not to hit each other when the balancers are installed in a line.
- Always employ a secondary support chain and leave the slack for smooth swivel.
- Always adjust the spring tension to meet the total weight of tool and the application.

## ELF series are available for high ceiling application.

## ELF-3/5/9

Long stroke

FUNCTION

- Plug type cable set
- Fall arrest device
- Drum lock device
- Worm gear spring adjustment
- CE Mark available

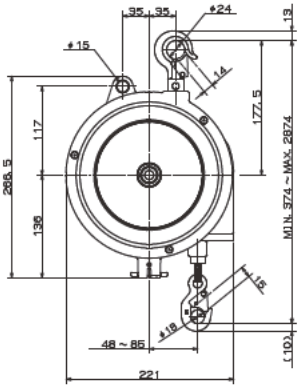


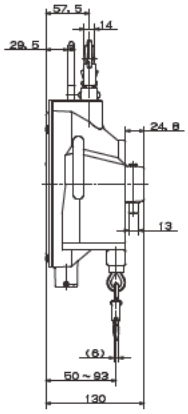


| Model | Capacity(kg) | Stroke(m) | Cable dia(φmm) | Mass(kg) |
|---|---|---|---|---|
| ELF-3 | 1.5-3.0 | 2.5 | 3.0 | 4.6 |
| ELF-5 | 3.0-5.0 | 2.5 | 3.0 | 4.8 |
| ELF-9 | 5.0-9.0 | 2.5 | 3.0 | 5.4 |

## ELF-15/22/30

Long stroke

FUNCTION

- Gauge
- Cartridge spring assembly
- Plug type cable set
- Fall arrest device
- Drum lock device
- Worm gear spring adjustment
- CE Mark available

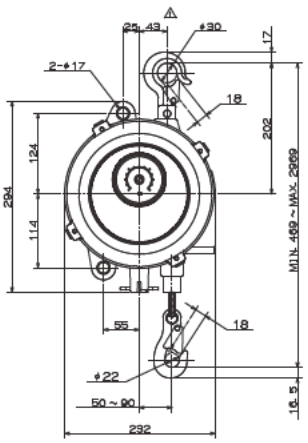


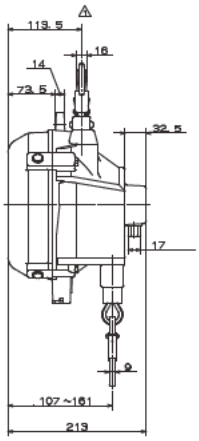


| Model | Capacity(kg) | Stroke(m) | Cable dia(φmm) | Mass(kg) |
|---|---|---|---|---|
| ELF-15 | 9.0-15.0 | 2.5 | 4.76 | 10.0 |
| ELF-22 | 15.0-22.0 | 2.5 | 4.76 | 10.2 |
| ELF-30 | 22.0-30.0 | 2.5 | 4.76 | 11.0 |

## ELF-40/50

Long stroke

FUNCTION

- Gauge
- Cartridge spring assembly
- Plug type cable set
- Fall arrest device
- Drum lock device
- Worm gear spring adjustment
- CE Mark available

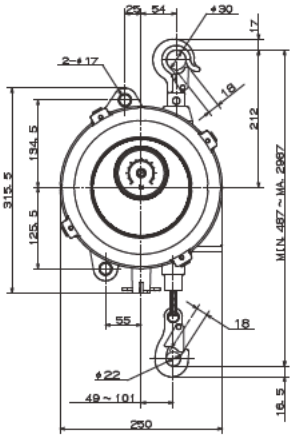


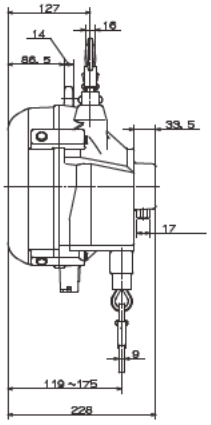


| Model | Capacity(kg) | Stroke(m) | Cable dia(φmm) | Mass(kg) |
|---|---|---|---|---|
| ELF-40 | 30.0-40.0 | 2.5 | 4.76 | 14.0 |
| ELF-50 | 40.0-50.0 | 2.5 | 4.76 | 14.5 |

### Selection of suitable model

Always use a suitable model meeting the total weight of suspended tool or instrument.
The balancer should be selected considering the weight of the tool and accessories.

### Installation

- Install Spring balancers uneven not to hit each other when the balancers are installed in a line.
- Always employ a secondary support chain and leave the slack for smooth swivel.
- Always adjust the spring tension to meet the total weight of tool and the application.

## ELF-60/70

Long stroke

FUNCTION

- Gauge
- Cartridge spring assembly
- Plug type cable set
- Fall arrest device
- Drum lock device
- Worm gear spring adjustment
- CE Mark available

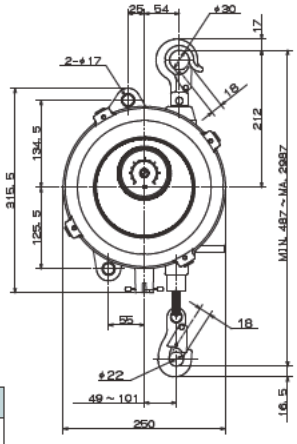


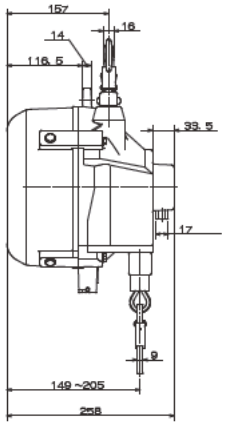


| Model | Capacity(kg) | Stroke(m) | Cable dia(φmm) | Mass(kg) |
|---|---|---|---|---|
| *ELF-60* | 50.0-60.0 | 2.5 | 4.76 | 17.1 |
| *ELF-70* | 60.0-70.0 | 2.5 | 4.76 | 18.0 |

## RSB-15

With Ratchet

FUNCTION

- Ratchet device
- Fall arrest device
- Worm gear spring adjustment

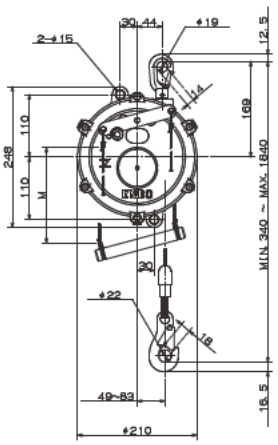


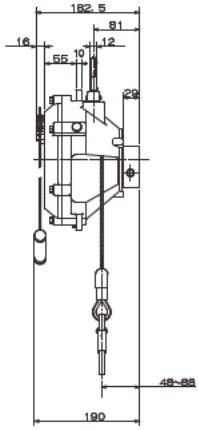


| Model | Capacity(kg) | Stroke(m) | Cable dia(φmm) | Mass(kg) |
|---|---|---|---|---|
| *RSB-15* | 9.0-15.0 | 1.5 | 5.0 | 7.4 |

## RSB-22/30/40

With Ratchet

FUNCTION

- Gauge
- Ratchet device
- Fall arrest device
- Worm gear spring adjustment

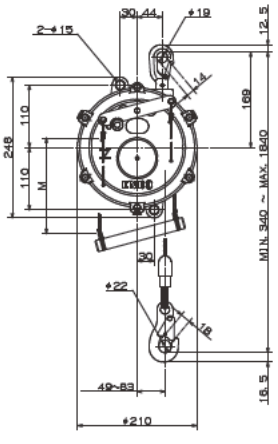


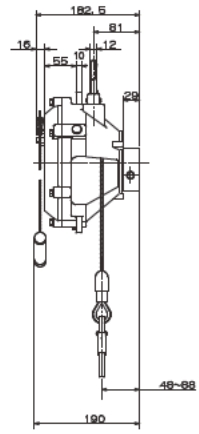


| Model | Capacity(kg) | Stroke(m) | Cable dia(φmm) | Mass(kg) |
|---|---|---|---|---|
| *RSB-22* | 15.0-22.0 | 1.5 | 5.0 | 7.7 |
| *RSB-30* | 22.0-30.0 | 1.5 | 5.0 | 8.1 |
| *RSB-40* | 30.0-40.0 | 1.5 | 5.0 | 8.5 |

### Selection of suitable model

Always use a suitable model meeting the total weight of suspended tool or instrument.
The balancer should be selected considering the weight of the tool and accessories.

### Installation

- Install Spring balancers uneven not to hit each other when the balancers are installed in a line.
- Always employ a secondary support chain and leave the slack for smooth swivel.
- Always adjust the spring tension to meet the total weight of tool and the application.

# Spring balancer with cable snap back prevention device

## Features

In case that a cable installed in a spring balancer is cut or a suspended tool is disengaged, the cable will snap back due to the tension of spring involved in a spring balancer, causing the dangerous situation such as the injury to personnel etc. This new device has developed to protect personnel from such the danger.

## Description of the device

As soon as a cable is cut, a drum revolves rapidly winding a cable up. Rapid revolution of the drum generates centrifugal force. The centrifugal force makes a Ratchet on a spring case pushed out and the ratchet sticks in a wheel fixed on a cover, stopping the revolution of the drum.

| Model | Capacity(kg) | Stroke(m) | Cable dia(φmm) | Mass(kg) |
|---|---|---|---|---|
| *EWA-15* | 9.0-15.0 | 1.3 | 4.0 | 4.7 |
| *EWA-22* | 15.0-22.0 | 1.5 | 4.76 | 8.9 |
| *EWA-30* | 22.0-30.0 | 1.5 | 4.76 | 9.3 |
| *EWA-40* | 30.0-40.0 | 1.5 | 4.76 | 11.9 |
| *EWA-50* | 40.0-50.0 | 1.5 | 4.76 | 12.3 |
| *EWA-60* | 50.0-60.0 | 1.5 | 4.76 | 13.3 |
| *EWA-70* | 60.0-70.0 | 1.5 | 4.76 | 13.6 |

* The cable snap back protection device for 70kg to 120kg capacity is available on request.

FUNCTION

- Gauge
- Cartridge spring assembly
- Plug type cable set
- Fall arrest device
- Snap back protection
- Drum lock device
- Worm gear spring adjustment
- CE Mark available

### EWA-15

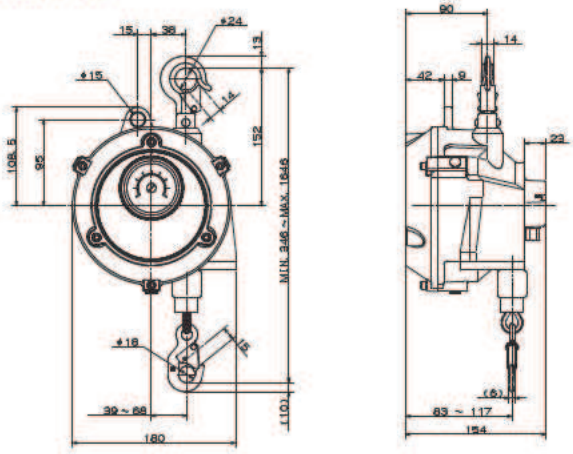


### EWA-22/30

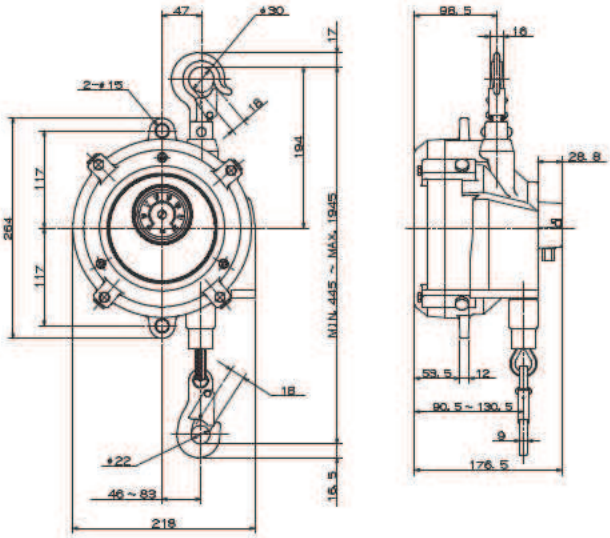


### EWA-40/50/60/70

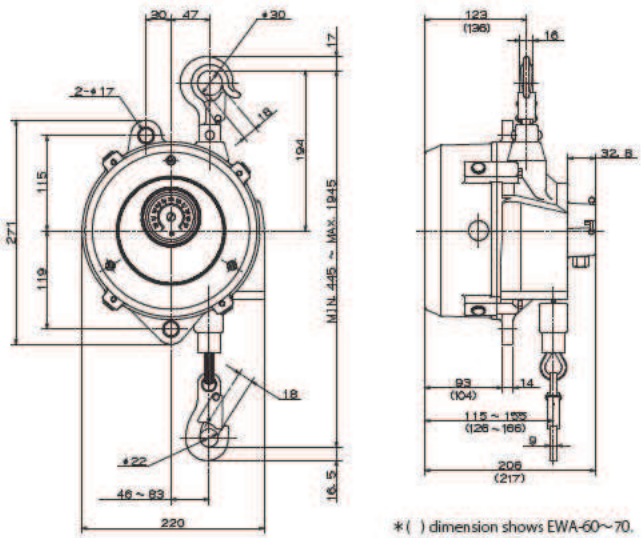


*( ) dimension shows EWA-60~70.

# Spring balancer with brake system

## Features

It uses one-way clutch lining braking system and it hangs up tools slowly.
Snap back with slow speed helps speedy and safe work for you.
Set brake free, you can use it as a normal balancer.

| Model | Capacity(kg) | Stroke(m) | Cable dia(φmm) | Mass(kg) |
|---|---|---|---|---|
| ***EWF-3B*** | 1.5-3.0 | 1.3 | 3.0 | 4.7 |
| ***EWF-5B*** | 3.0-5.0 | 1.3 | 3.0 | 8.9 |
| ***EWF-7B*** | 5.0-7.0 | 1.3 | 3.0 | 9.3 |

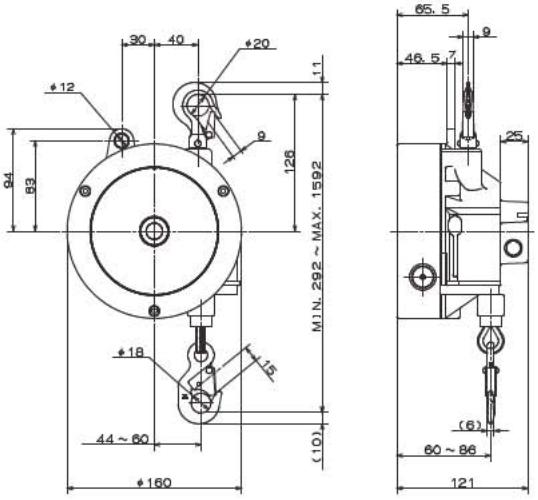


FUNCTION

- Cartridge spring assembly
- Plug type cable set
- Fall arrest device
- Drum lock device
- Worm gear spring adjustment
- CE Mark available

# Air tool balancer ATB

## Features

Instead of the wire rope, the urethane hose is wound and air tools can be easily moved up and down.
Casing and drum are made of acrylonitrile butadiene-styrene resin and they are light.
The diameter of hose nipple is φ9mm at inlet portion.
And swivel joint size Rc.1/4 at outlet portion.

## Working conditions

- Application area : Indoor and normal atmospheric conditions
- Temperature rang : -10℃ to +40℃
- Application fluid : Air
- Maximum air pressure : 1.0MPa {10kgf/cm²}

| Model | Capacity(kg) | Hose travel (m) | Air inlet.(φmm) | Mass(kg) |
|---|---|---|---|---|
| ***ATB-0*** | 0.5-1.5 | 1.3 | 6.3 | 1.58 |
| ***ATB-1*** | 1.5-3.0 | 1.3 | 6.3 | 1.66 |
| ***ATB-2*** | 3.0-5.0 | 1.3 | 6.3 | 1.73 |

## Dimensions(mm)

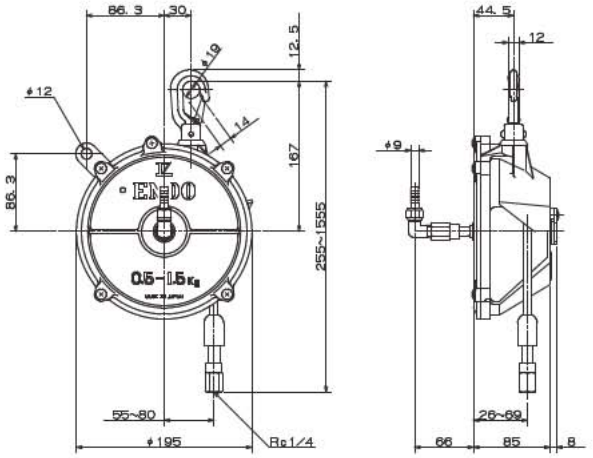


## Flow characteristics

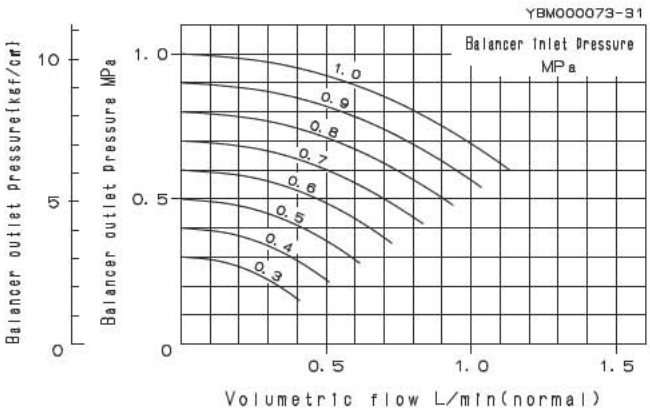


FUNCTION

- Ratchet system spring adjustment
- Cushion cover available
- CE Mark available

※ATB-2 is not available for CE Mark.

## Accessories

# Protect wire set

| Product number | Available model |
|---|---|
| ***LBP000794*** | ATB-0,1,2 |

The protector is available for tool fall protection caused by unintentionally detaching an air tool from a coupling.

# Tool hose balancers THB

## Features

Instead of the wire rope, the urethane hose is wound and air tools can be easily moved up and down.
When the spring failure is happened, the fall prevention device will operate and stop the suspended tool or device.
The inside diameter of hose is φ8.5mm which supplies enough air to operate the suspended air too or device.

## Working conditions

- Application area : Indoor and normal atmospheric conditions
- Temperature rang : -10℃ to +40℃
- Application fluid : Air
- Maximum air pressure : 1.0MPa {10kgf/cm²}

| Model | Capacity(kg) | Hose travel (m) | Hose inside diameter. (φmm) | Mass(kg) |
|---|---|---|---|---|
| THB-15 | 0.5-1.5 | 1.3 | 8.5 | 1.9 |
| THB-25 | 1.5-2.5 | 1.3 | 8.5 | 2.0 |
| THB-35 | 2.5-3.5 | 1.3 | 8.5 | 2.1 |
| THB-50 | 3.5-5.0 | 1.3 | 8.5 | 2.1 |
| THB-65 | 5.0-6.5 | 1.3 | 8.5 | 2.2 |

## Dimensions(mm)

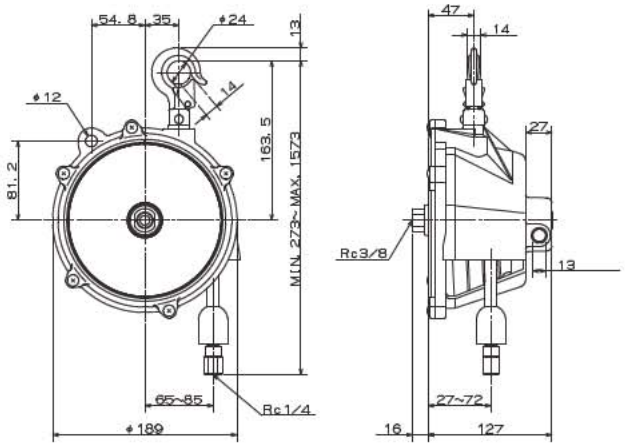


## Flow characteristics

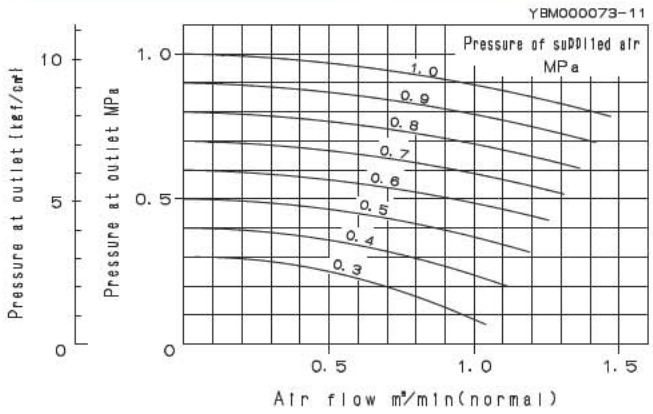


**FUNCTION**

- Worm gear spring adjustment
- Cushion cover available
- Fall arrest device
- CE Mark available

## Special accessories

### Swivel elbow fitting for air inlet (outer dia 10.5mm)
Parts No. **LBP000654**

### Swivel Joint
Parts No. **LBP000659**

### Protect wire
Parts No. **LBP000801**

The protect wire prevents accidental dropping and / or disconnection between the hose and tool.

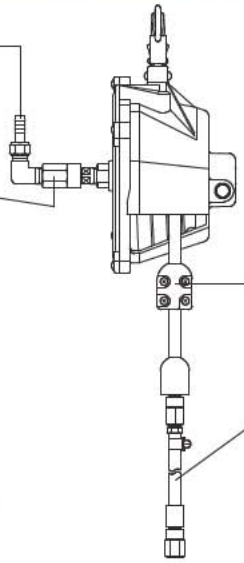

### Coupling socket (Outer dia 11.3mm)
Parts No. **LBP000784**

### Adjustable hose stopper
Parts No. **LBP000800**

### Special hose for an extended length (with a swivel joint ;1m)
Parts No. **LBP000785**
(max. 2m extension)

# Air tool reel ATR

## Features

An included spring works to retract a hose into the device automatically.
A contained hose solves the short of air consumption for air tool owing to a large inner diameter of 10φ.
A ratchet system applied for the device can keep a tool suspended at any position on the hose travel where you want.

※On-off work of ratchet system is available through knob operation.
The fall preventive system from the tool drop works when the included spring has been broken.

ATR-5 is installed with top hook and ATR-5-1 is installed with bracket.

| Model | Max tension N{kgf} | Hose travel (m) | Air inlet.(φmm) | Mass(kg) |
|---|---|---|---|---|
| ATR-5 | 4.9{5.0} | 2.0 | 10.0 | 3.8 |
| ATR-5-1 | 4.9{5.0} | 2.0 | 10.0 | 4.2 |

## Flow characteristics

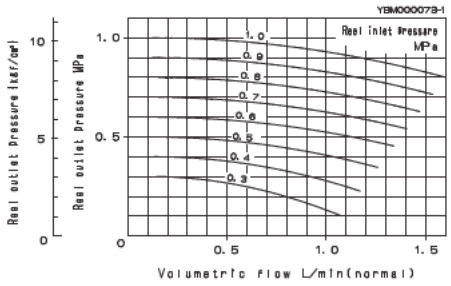


## Tension courves

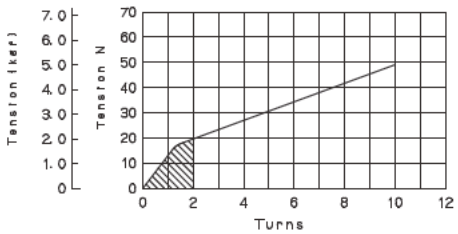


## Accessories

**Special hose for extended length**
*(with a swivel joint)*

**1m** Parts No. LBP000659
**2m** Parts No. LBP000664
**3m** Parts No. LBP000665

**Adjustable hose stopper**

Parts No. LRP007933

## Dimensions(mm)

### ATR-5

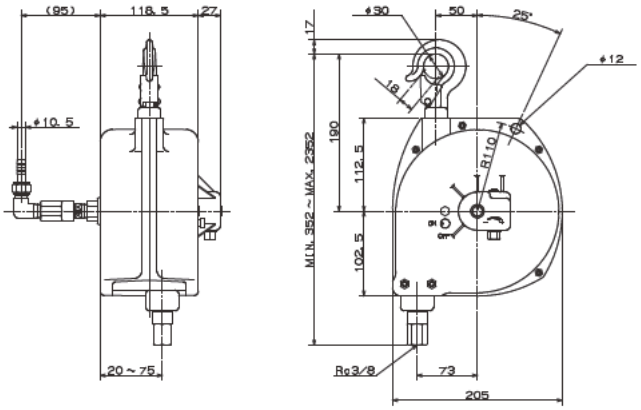

### ATR-5-1

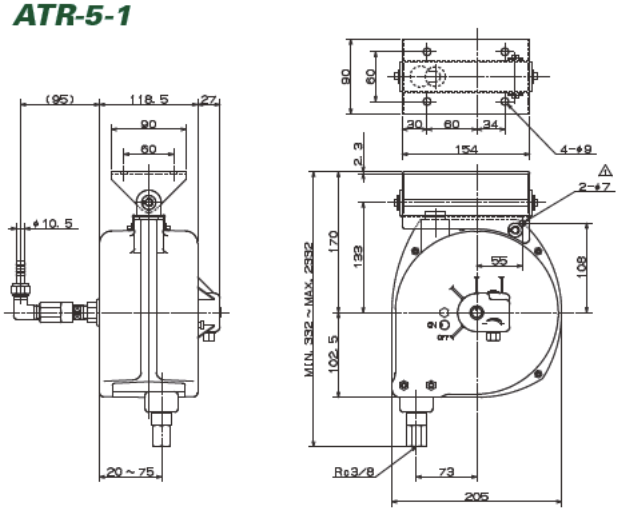

FUNCTION

- Worm gear spring adjustment
- Ratchet device
- Fall arrest device
- CE Mark available

## Features

This model can be stopped on the way of cable travel because of ratchet system.(-A type)
The jamming of the cable will not occur because of its cylindrical drum.
They has long cable travel (ER-3A/3B, ER-5A/5B=3m, ER-10A/10B=4m) and are designed light and compact.

FUNCTION

Ratchet system spring adjustment

COVER Cushion cover available

CE Mark available
※Only ER 3A/ER 3B is available for CE Mark

| Model | Initial Max. tension (tension at retracted) | | Active cable travel (m) | Tension build-up, full length of cable | | the number of available spring winding | with or without ratchet | Diameter of cable (φmm) | Mass(kg) |
|---|---|---|---|---|---|---|---|---|---|
| | N | {kgf} | | N | {kgf} | | | | |
| ***ER-3A*** | 18 | 1.8 | 3 | 12 | 1.2 | about 16 | ○ | 2.38 | 1.4 |
| ***ER-3B*** | 18 | 1.8 | 3 | 12 | 1.2 | about 16 | × | 2.38 | 1.3 |
| ***ER-5A*** | 25 | 2.5 | 3 | 25 | 2.5 | about 13 | ○ | 2.38 | 1.5 |
| ***ER-5B*** | 25 | 2.5 | 3 | 25 | 2.5 | about 13 | × | 2.38 | 1.4 |
| ***ER-10A*** | 49 | 5.0 | 4 | 49 | 5.0 | about 13 | ○ | 2.38 | 4.5 |
| ***ER-10B*** | 49 | 5.0 | 4 | 49 | 5.0 | about 13 | × | 2.38 | 3.8 |

(note) The tension increases gradually as the cable is pulled out. For example, on ER-5A, supporting that the tension of spring is adjusted at 25N {2.5kgf} when the cable is fully retracted, the tension of spring (when the cable is pulled out 3m) is equal to 50N (25+25) {2.5+2.5=5kgf}

## Tension curves

### The relation with the number of drum revolving and the length of winding cable

The length of winding cable per one revolving of drum ***ER-3A/3B,5A/5B*** ··· about 350mm ***ER-10A/10B*** ··· about 480mm

***ER-3A/3B***

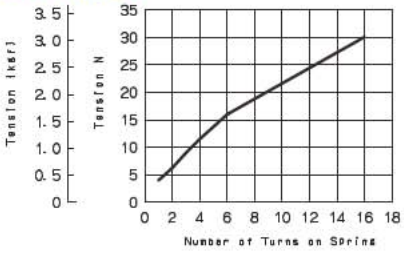


***ER-5A/5B***

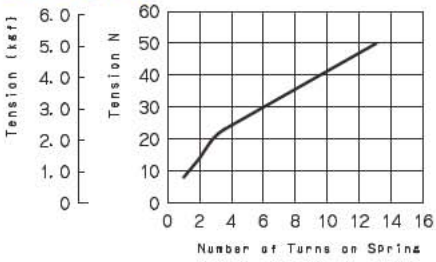


***ER-10A/10B***

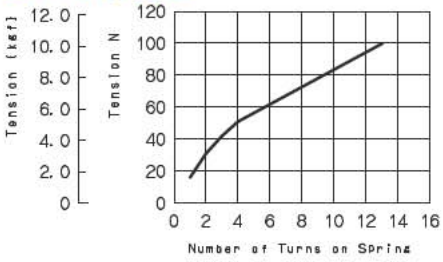


### Dimensions(mm)

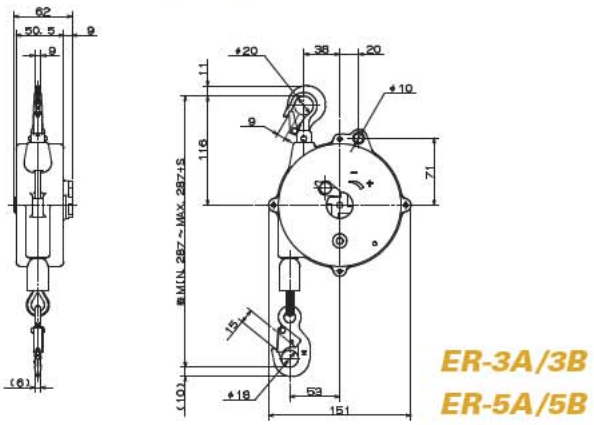


***ER-3A/3B***
***ER-5A/5B***

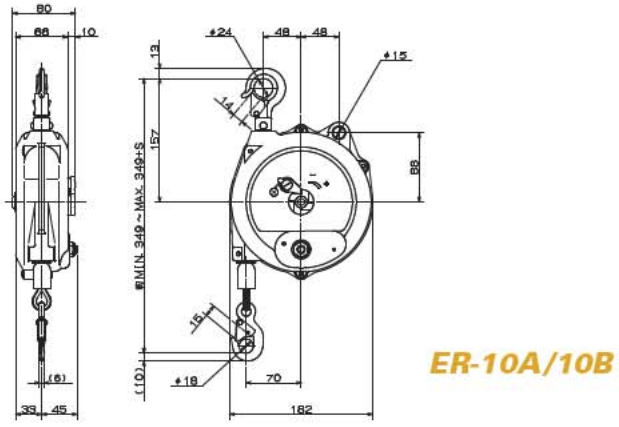


***ER-10A/10B***

# Accessories

## Cushion

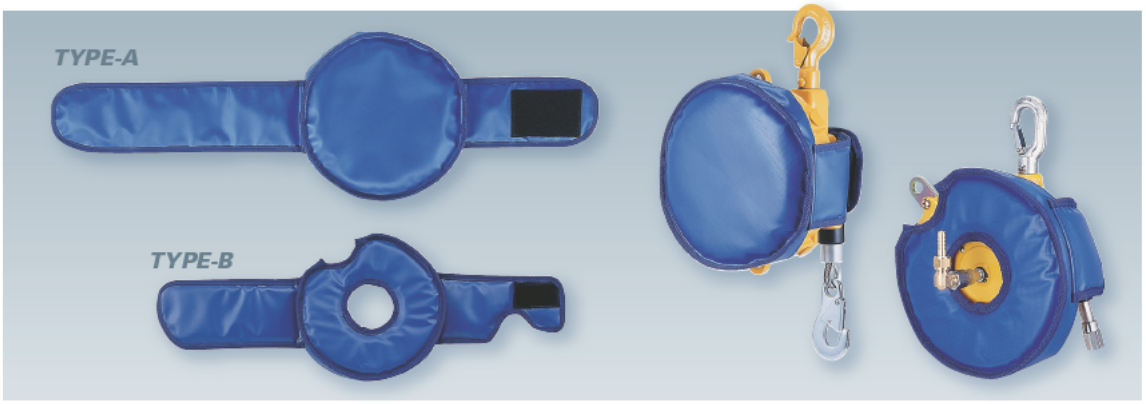


**TYPE-A**
Parts No. **P2B300789**
EWF-22 – 120
EWF-90A – 120A

**TYPE-B**
Parts No. **P2B300799**
ATB series
THB series

## Insulation Hook

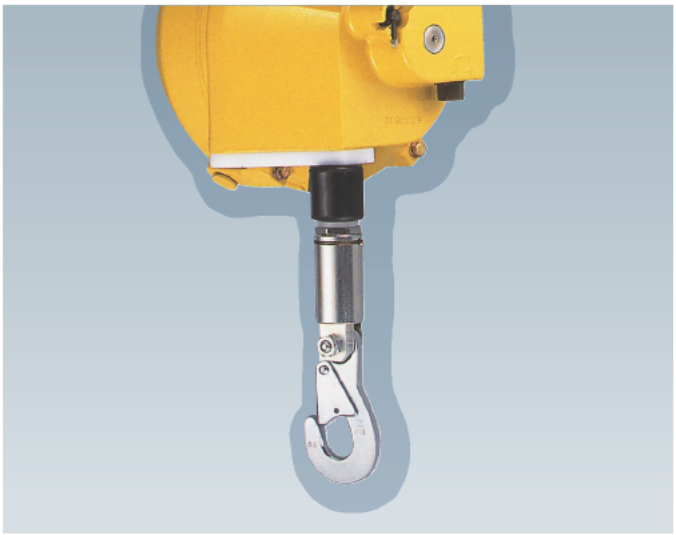

| Parts No. | Diameter of cable (φmm) | Available model |
|---|---|---|
| LBP000145 | 4.0 | EWF-9・15 |
| LBP000146 | 4.76 | EWF-22–70, EWA-22–70 |
| LBP001185 | 4.76 | EWF-90–120, EWF-90A–120A |

Owing to insulation of holder, it becomes unnecessary to use the insulation made of ceramic (or others) which is casual at present.
This composes one set with special cable.

## Adjustable cable stopper

*Split type*

*Plug-in type*

| Type | Parts No. | Available model |
|---|---|---|
| Split | LBP000127 | RSB-15—40 |
| | LBP000150 | ER-3A/3B—ER-10A/10B |
| Plug-in | LBP000151 | EW(EWS)-3—7, ELF-3—9 |
| | LBP000131 | EWF-9/15 |
| | LBP000132 | EWF-22—70, ELF-15—70, EWF-90—120, EWF-90A—120A |

## Karabina

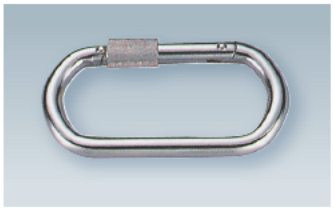

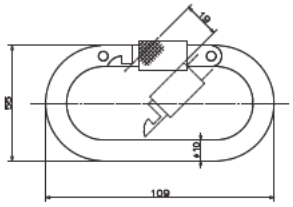


| Parts No. | Breaking load |
|---|---|
| P2S400104 | 16.7kN {1700kgf} |

## S Type hook

| Model | Parts No. | Working load | Mass(kg) |
|---|---|---|---|
| SH-60 | LBP000231 | 590N {60kgf} | 0.16 |
| SH-150 | LBP000232 | 1470N {150kgf} | 0.43 |

## Swivel hook

The swivel hook enables 360° flexible operation.
If you do rotation work, the swivel hook reduce cable damage.

| Parts No. | Available model |
|---|---|
| P2B401118 | EWF-22-70 |

## Plain trolley

Buffer set
Parts No. LBP000771

| Model | Capacity(kg) | Minimum radius for corner (mm) | Beam widths(B) (mm) | Mass(kg) |
|---|---|---|---|---|
| *PTF-60* | 60 | — | 75 | 0.8 |
| *PTF-125* | 125 | 600 | 50/75 | 1.6 |
| *PTF-250* | 250 | 900 | 75/100/125 | 4.2 |

Several kind of balancers can not be connected with plain trolleys directly.
Please use a Karabina for connection.

### PTF-60

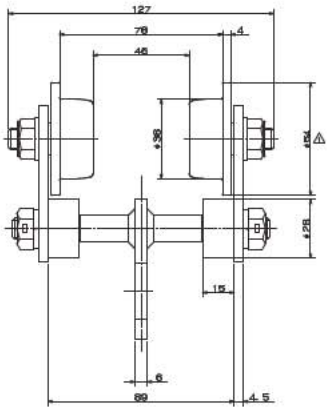


### PTF-125·250

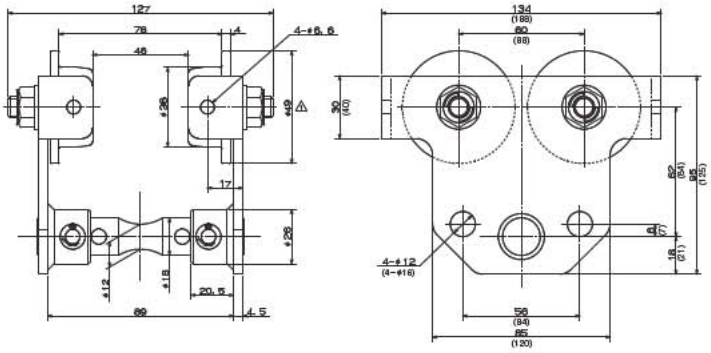


※( ) dimension shows PTF-250.

## Corresponding table of Accessories

| Parts No. | Name | | EW3·5 | EWS | EWF 9·15 | EWF 22-70 | EWF 90-120 | EWA | ELF 3-9 | ELF 15-70 | ER | RSB | ATB | THB | ATR |
|---|---|---|---|---|---|---|---|---|---|---|---|---|---|---|---|
| LBP000145 | Insulation hook | φ4.0 | | | ○ | | | | | | | | | | |
| LBP000146 | Insulation hook | φ4.76 | | | | ○ | | ○ | | | | | | | |
| LBP001185 | Insulation hook | φ4.76 | | | | | ○ | | | | | | | | |
| P2B401118 | Swivel hook | | | | | ○ | | | | | | | | | |
| LBP000127 | Stopper | | | | | | | | | | | ○ | | | |
| LBP000150 | Stopper | | | | | | | | | | ○ | | | | |
| LBP000151 | Stopper | | ○ | ○ | | | | | ○ | | | | | | |
| LBP000131 | Stopper | | | | ○ | | | | | | | | | | |
| LBP000132 | Stopper | | | | | ○ | ○ | ○ | | ○ | | | | | |
| P2B300789 | Cushion | TYPE-A | | | | ○ | | ○ | | | | | | | |
| P2B300799 | Cushion | TYPE-B | | | | | | | | | | | ○ | ○ | |
| P2S400104 | Karabina | | ○ | ○ | ○ | ○ | ○ | ○ | ○ | ○ | ○ | ○ | ○ | ○ | ○ |

※EWF-90—120 is including EWF-90A—120A.

# Eco Balancer *Type-X Type-Y Type-C*

# EWF-Type-X / EWF-Type-Y

## Features

- The world's first "Eco-Friendly" spring balancer
- Synthetic food grade grease (H1 grade)
- High potential capability and endurance
- Flexible adaptability in a wide range of 1-120kg models

## Specifications

| | Treating Method | | | | | |
|---|---|---|---|---|---|---|
| **Type** | **Y Type** | | | **X Type** | | |
| **Casing** | **Unpainted** | | | **Unpainted** | | |
| **Cover** | **Unpainted** | | | **Unpainted** | | |
| **Upper Hook** | **Zinc plating** | | | **Zinc plating** | | |
| **Rivet** | **Clear painting** | | | **Stainless steel** | | |
| **Rope** | **Nylon rope** | **White** | **EW(EWS)-3Y–7Y** | **Nylon rope** | **White** | **White EW(EWS)-3X–7X** |
| | | **Black** | **EWF-9Y–15Y** | | **Black** | **Black EWF-9X–15X** |
| | **SUS Wire rope** | | **EWF-22Y–120Y** | **SUS Wire rope** | | **EWF-22X–120X** |
| **Lower Hook** | **Standard(Zinc plated)** | | | **Stainless steel** | | |
| **Pin(EWF-9–120)** | **Zinc plating** | | | **Zinc plating** | | |
| **Plug** | **Standard** | | | **Stainless steel** | | |
| **Bolts** | **Standard(Zinc plated)** | | | **Stainless steel** | | |
| **Screws** | **Standard(Zinc plated)** | | | **Stainless steel** | | |
| **Grease** | **Standard grease(on Spring)** | | | **Food grease(on Spring)** | | |

# For the next generation

*Through the development of the product that is environmentally friendly, we contribute to the sustainable development of community.*

# EWF-Type-C

## Plastic Drum

Abrasion Powder in greatly reduced comparing with the existing model.

## Fall Arrest Device

Drum lock system in equipped to prevent to fall the tools in case of the spring breakage.

## Replaceable Wire rope

Easy wire rope replacement is provided with the plug-in method.

## Riveted Spring

Outer riveted spring helps safety replacement of the spring.

***Specifications***

| Model | Capacity(kg) | Stroke(m) | Wire rope dia.(mm) | Mass(kg) |
|---|---|---|---|---|
| *EWF-3C* | 1.5-3.0 | 1.3 | ϕ3 | 1.7 |
| *EWF-5C* | 3.0-5.0 | 1.3 | ϕ3 | 1.9 |
| *EWF-7C* | 5.0-7.0 | 1.3 | ϕ3 | 1.9 |

ZENDO

JAG-MAR Sp. z o.o. | ul. Złota 36 | 62-800 Kalisz | tel. 62 766 31 01 | www.jag-mar.pl | biuro@jag-mar.pl